20W Dual Output Standard Series

- High reliability, low cost
- Top brand components for key parts
- Built-in EMI filter
- Protections: overload/ short circuit
- 5 years limited warranty
- F602 111 × 78 × 36(mm)

AC input voltage range.....170~264VAC (210~370VDC)
Inrush current .....cold start, 30A/230V
Input leakage current.....＜0.7mA/ 230VAC
Line regulation (full load) .....≤±0.5%
Voltage tolerance.....V_1: ≤±1%, V_2: ≤±3% (with regulator);
≤±10% (without)
Output voltage adjust range .....V_1: ±5% of rated output voltage
Output overload protection .....105~150%
Withstand voltage.....I/P -O/P: 1.5KVAC/1min
I/P -F/G: 1.5KVAC/1min
O/P-F/G: 0.5KVAC/1min
Rise time.....50ms@full load (typical)
Hold up time .....20ms@full load (typical)
Operating temperature .....-20℃~+50℃
Safety standards.....design meet GB4943, UL60950, EN60950
Cooling method .....convection

Model	DC Output		R&N	Efficiency
HF20W-D-A	5V	0.5~3.0A	80mV	62%
	5V	0.0~1.0A	100mV	
HF20W-D-B	5V	0.4~3.0A	80mV	70%
	12V	0.0~1.0A	120mV	
HF20W-D-C	5V	0.5~3.0A	80mV	70%
	15V	0.0~0.5A	120mV	
HF20W-D-D	5V	0.4~2.0A	80mV	71%
	24V	0.0~0.5A	150mV	
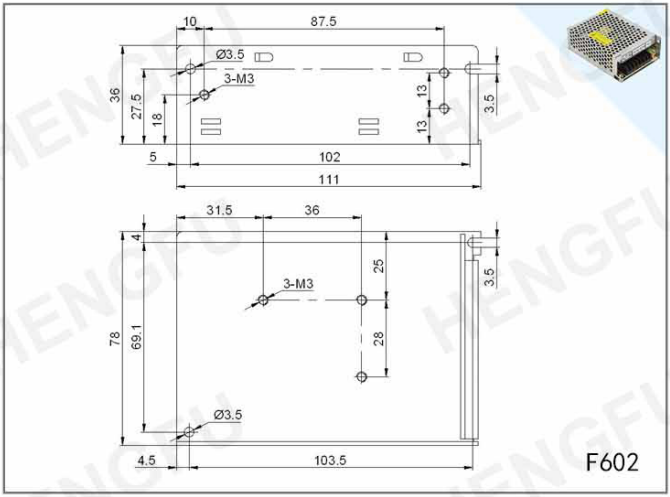
Drawing